QX

Powerful Centrifugal Fan

ELTA

QX

Description

The QX centrifugal fan is ideal for powerful air-extraction in small and medium size areas. These extract fans are designed to overcome the resistances of long ducting systems. This fan can be wall and ceiling mounted. Designed for surface or flush (plasterboard) installation. Available in 80 and 100mm models.

Typical Applications

Exhaust from toilets, ensuites bathrooms, washrooms, laundries and other small to medium spaces.

Features

- Aesthetic front flat cover for modern interior design, easily removed for cleaning.
- Removable filter in PP to protect the impeller and the motor, easily removed for cleaning.
- Forward curved centrifugal impeller, providing enhanced aerodynamic properties, low noise levels and increased efficiency.
- High quality ball bearing motor for fan life of more than 30,000 hours.
- Totally enclosed 2-speed induction motor, ideal for cold climates.
- High performance due to inbuilt guide vanes to straighten air, optimising performance and reducing power consumption.
- Includes backdraft shutter that prevents outside air entering building when fan is switched off.
- Double insulated so no earth connection is required.
- Suitable for continuous and intermittent running.
- Cable entry from the back or side of the unit.
- Comes with 2 year warranty.

Construction

Fan housing made from high quality ABS which is shock proof and long lasting.

Finished in white RAL 9010 and UV resistant.

Model includes backdraft shutter.

Motor

Type - 2-speed, induction motor.

Electricity supply - single phase 220-240V, 50/60Hz.

Bearings - ball.

Maximum ambient temperature - 50°C.

Class II insulation, IPX4 rated.

Internal Thermal Protection

Model 80 and 100 - fuse.

Testing

Airflow to ISO 5801:2007

Noise to ISO 3741:2010

Ancillary Equipment

Duct

External Grilles

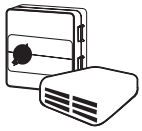

Controllers

Suggested Specification

The centrifugal fan shall be of the QX Series as supplied by Elta and be of the models shown.

It shall have a 2-speed induction motor with ball bearings, and built in thermal protection. It will include a built in removable filter.

All models shall be fully tested to ISO 5801:2007 for airflow and ISO 3741:2010 for noise.

Technical Data

Model Number QX...	Speed Setting	Free Air m^3/sec	Avg. dB(A) @ 3m	Watts	Max. °C
80	High	0.029	38	28	50
	Low	0.017	27	17	
100	High	0.029	38	28	50
	Low	0.017	27	17	

How To Order

QX | ☐ | ☐

QX - QX Series

80, 100 - Fan spigot diameter in mm

S - Standard
T - Run-on Timer
HT - Humidistat & Timer
P - Pull Cord
HTP - Humidistat, Timer & Pull Cord

Tel **+603 7846 0340** Email **info@elta.asia** Website **elta.asia**

Dimensions

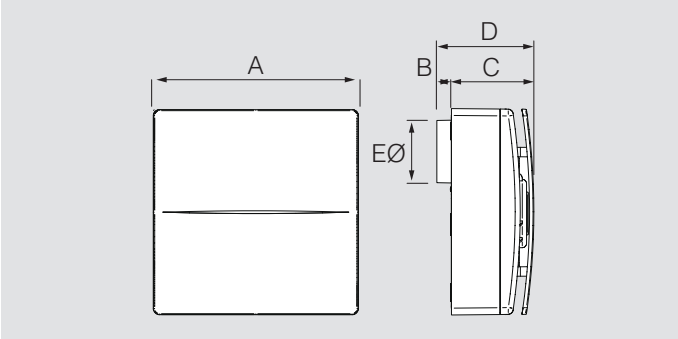

Model QX...	Dimensions, mm A	B	C	D	EØ	Approx. wt. kg
80	241.5	17	96.5	113.5	73.5	1.87
100	241.5	17	96.5	113.5	96.0	1.87

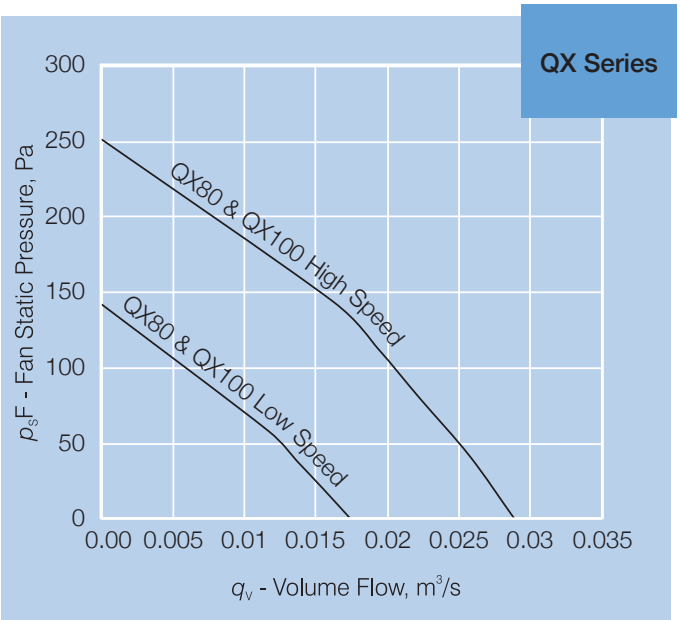

Elta Asia Sdn Bhd has a policy of continuous product development and improvement and therefore reserves the right to supply products which may differ from those illustrated and described in this publication.
Confirmation of dimensions and data will be supplied on request.

ELTA

Elta Asia Sdn Bhd

Tel **+603 7846 0340**
Email **info@elta.asia**

elta.asia

QX-05-2026 Issue A

FS 676456

A MEMBER OF ELTA GROUP